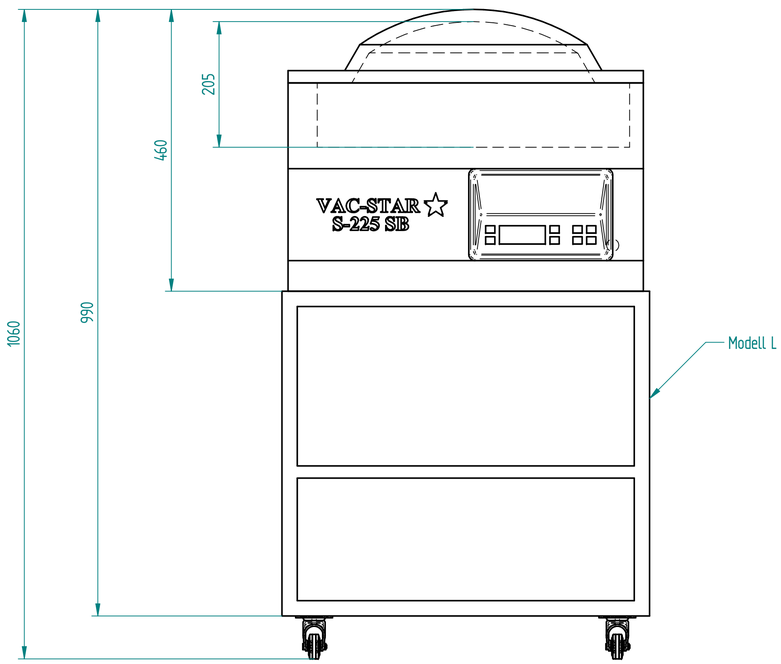
1060
990
460
205
VAC-STAR
S-225 SB
Modell L

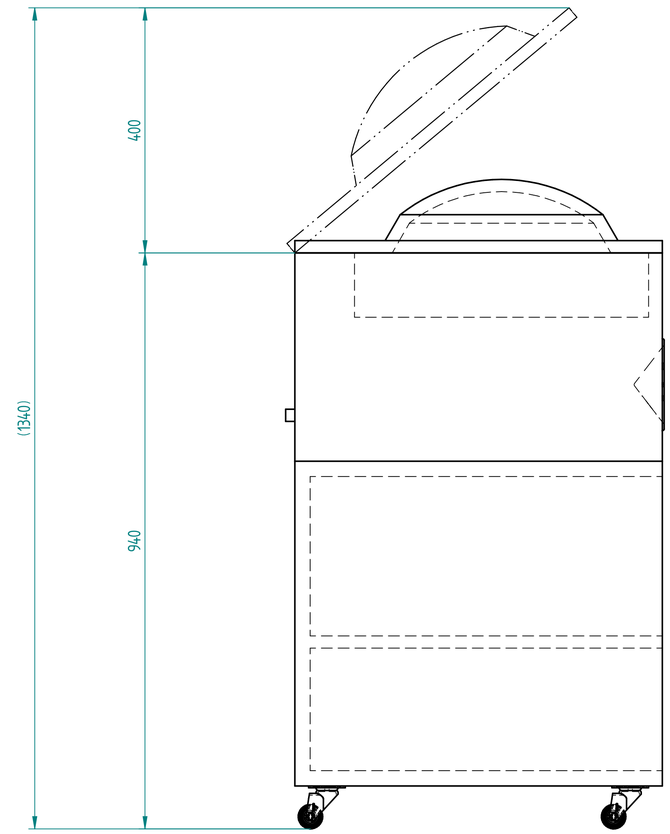
(1340)
400
940

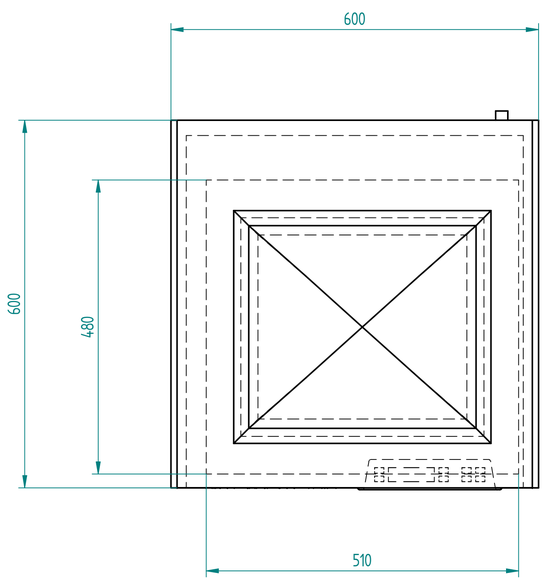
600
600
480
510

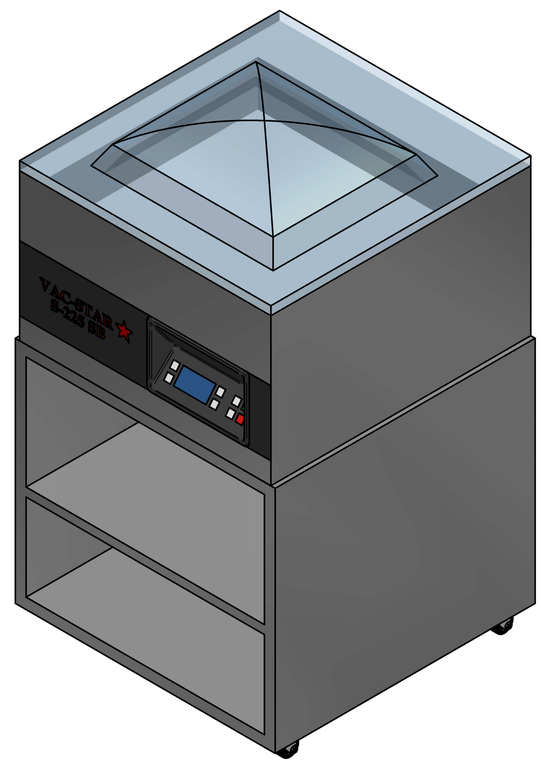
VAC-STAR
S-225 SB