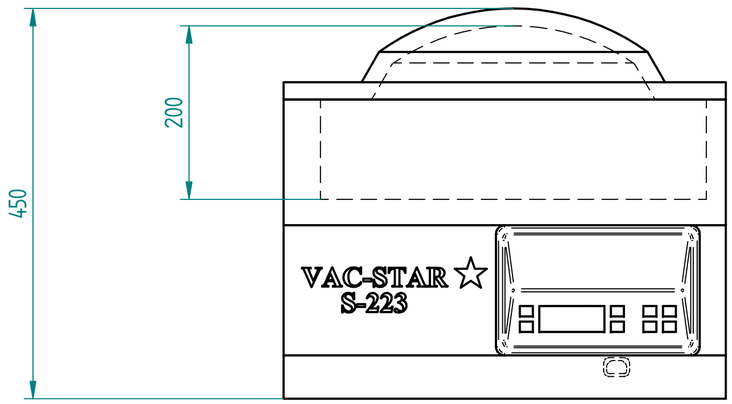
450
200
VAC-STAR
S-223

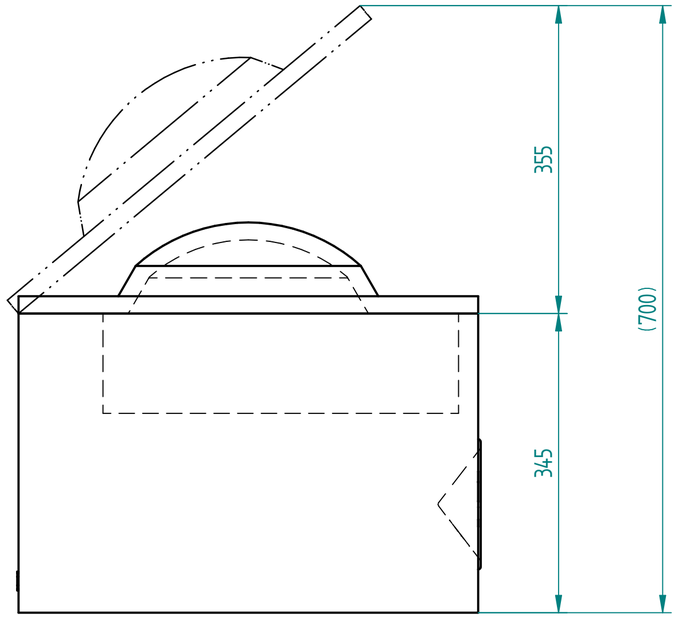
355
(700)
345

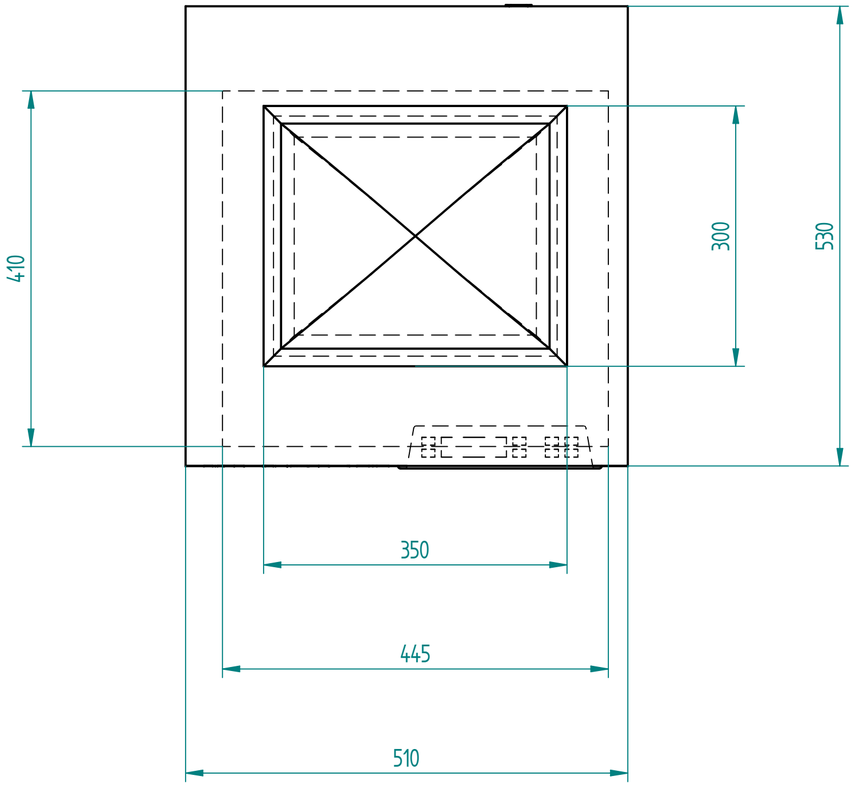
410
300
530
350
445
510

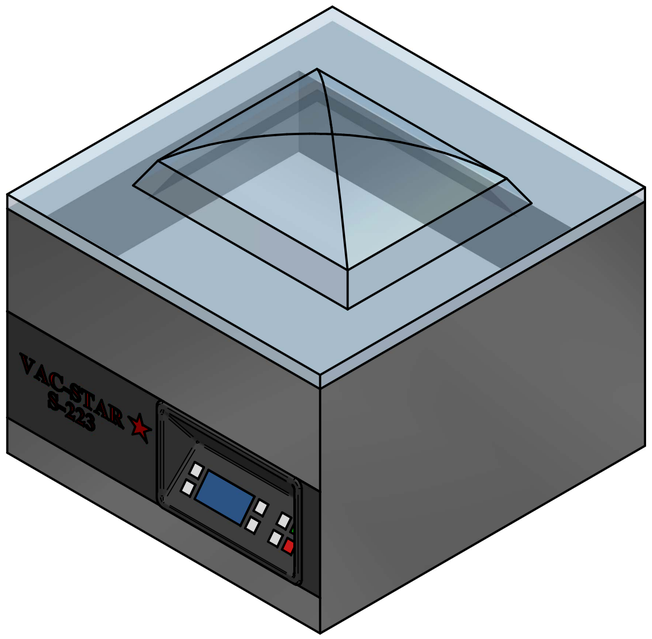
VAC-STAR
S-223